HSF

NOTES:
Current Rating:0.5A AMP
Voltage Rating:200V AC/300V DC
Contact Resistance:70milliohm Max
Withstand Voltage:500V AC/DC
Insulation Resistance:100Megohm Min
Operation Temperature:-40℃ to +85℃

Housing Material:LCP(UL94V-0)
Contact Material:Phosphor Bronze
Hold Down Material:Brass
Contact plating:Au over Ni Plating

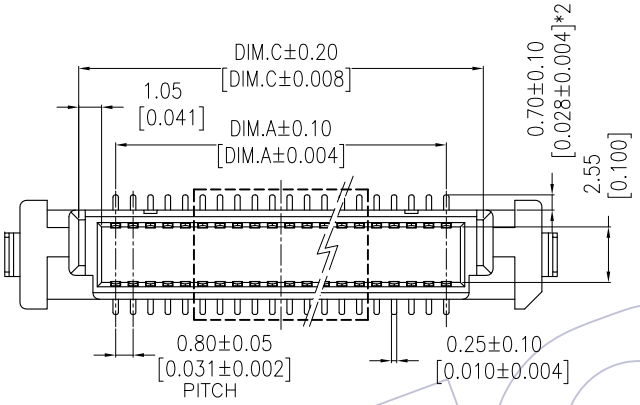

Recommended P.C.B Layout (Top Side)
(PCB BOARD TOLERANCE ± 0.05)

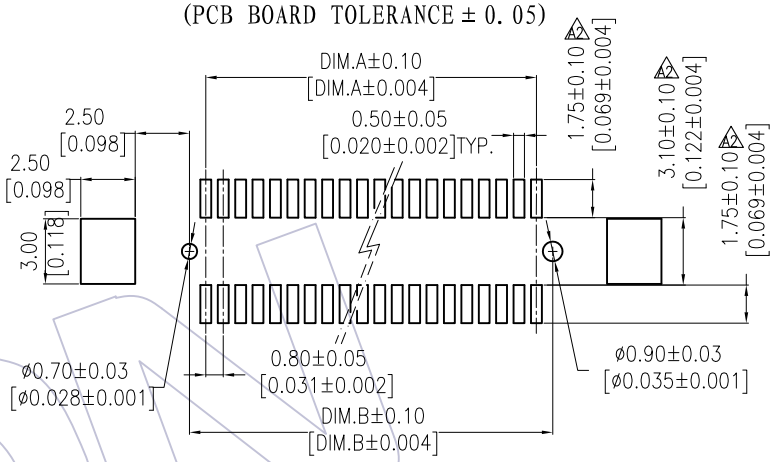

Ordering Information

3615-P XXX - XXX XX X 01

- No.of Pins
- Housing High
- Contact Plating: G1=3u"Gold, G2=5u"Gold, S1=3u"Gold/Tin, S2=5u"Gold/Tin
- T=Tube, P=Tube+CAP, R=Tape&Reel+CAP

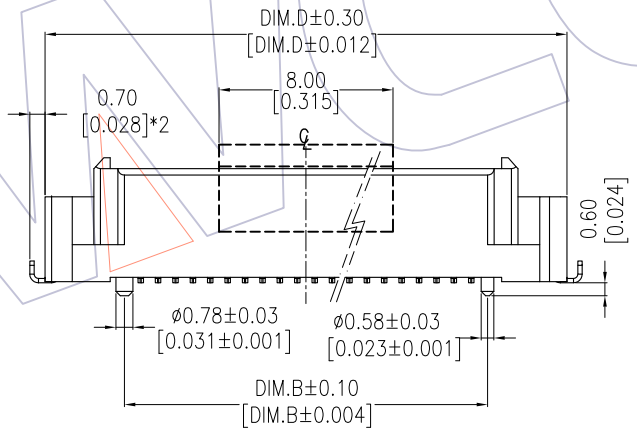

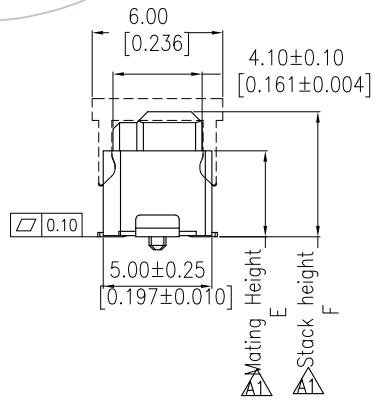

A1 PART NO	E	F
3615-PXXX-047XXX01	3.00	4.75
3615-PXXX-057XXX01	4.00	5.75
3615-PXXX-077XXX01	6.00	7.75

NO.OF CONTACT	DIM.A	DIM.B	DIM.C	DIM.D
20	7.2	8.7	10.6	16
30	11.2	12.7	14.6	20
40	15.2	16.7	18.6	24
50	19.2	20.7	22.6	28
60	23.2	24.7	26.6	32
70	27.2	28.7	30.6	36
80	31.2	32.7	34.6	40
100	39.2	40.7	42.6	48
120	47.2	48.7	50.6	56
140	55.2	56.7	58.6	64

REV	DATE	MODIFICATION DESCRIPTION	CHANGE
A2	2013/01/10	MODIFY THE PCB	——
A1	2012/07/24	MODIFY	——
A0	2012/01/31	NEW	——

OPERATION	
X.X	±0.40
X.XX	±0.25
X.XXX	±0.15
Angle	± 3°
DIM	TOL

DRAW	Tsingsn	DATE	2013/01/10
CHECK		DATE	
APPROVE		DATE	

SCALE	FIT
UNIT	mm / inch
SIZE	A4
SHEET	1/1
PROJ.	

PART NO. 3615-PXXX-XXXXXX01

TITLE: 0.80mm B TO B "E" MALE SMT TYPE

Customer NO.

WCON
Http: www.wcon.com
WCON-Dongguan
Tel: +86 769 85358920
Fax: +86 769 85358915
E-mail: sales@wcon.com
WCON-Kunshan
Tel: +86 512 57468408
Fax: +86 512 57468468
E-mail: salesks@wcon.com